© 2026 All rights reserved.
This document may not, in whole or in part, be copied, photocopied, reproduced, translated or converted to any electronic or machine readable from without prior written permission of Mehmet Günce Akkoyun.
Engineer contact : akkoyun@me.com

Property of Gunce Akkoyun

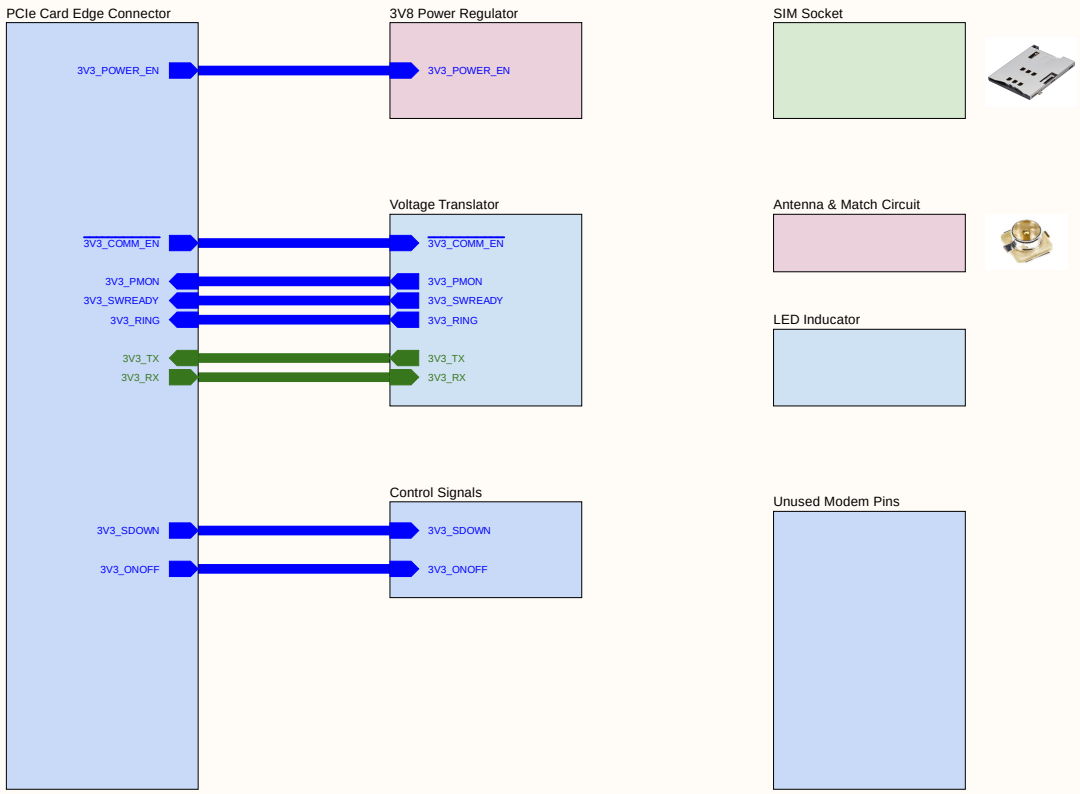

www.github.com/akkoyun/B101

GSM IoT Block Diagram		Engineer :	Gunce Akkoyun
		Customer :	Gunce Akkoyun
Size : A4	Project : qSlot IoT 4G Modem	Product ID :	B101
		Module ID :	B101
Date : 28.04.2026	Time : 12:25:59	Page : 1 / 9	Version : 00.00.03
File : GSM IoT Block Diagram.SchDoc			Revision : CA

Ovoo Electronics
Seker Mah. Ayyildiz Sok
Silverstar Apt. 7/7
Selcuklu / Konya Türkiye

Copyright 2024 Mehmet Gunce Akkoyun (Commercial Secret)

© 2026 All rights reserved.
This document may not, in whole or in part, be copied, photocopied, reproduced, translated or converted to any electronic or machine readable from without prior written permission of Mehmet Günce Akkoyun.
Engineer contact : akkoyun@me.com

Property of Gunce Akkoyun

J1

Bus Type : Mini PCI Express
Mating Connector : TE-1775862-2
Pitch : 0.8 mm
Number of Positions : 52

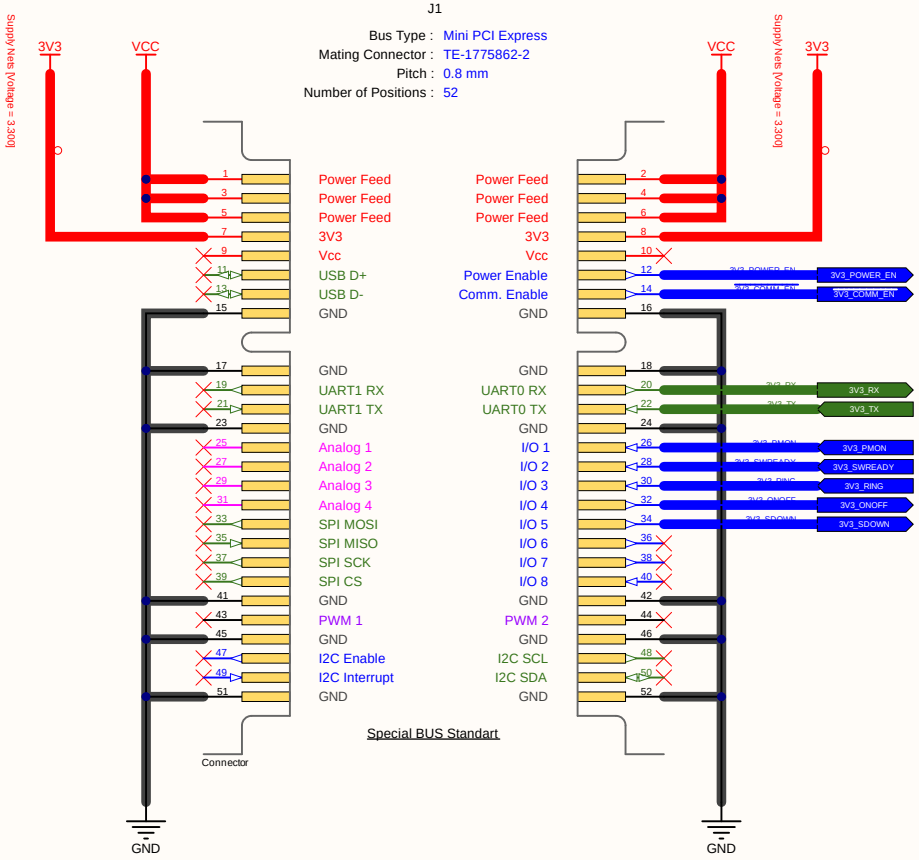

www.github.com/akkoyun/B101

Card Edge Connector		Engineer : Gunce Akkoyun	Ovoo Electronics
		Customer : Gunce Akkoyun	Seker Mah. Ayyildiz Sok
Size : A4	Project : qSlot IoT 4G Modem	Product ID : B101	Silverstar Apt. 7/7
		Module ID : B101	Selcuklu / Konya Türkiye
Date : 28.04.2026	Time : 12:25:59	Page : 2 / 9	Version : 00.00.03
File : Edge_Connector.SchDoc			Revision : CA

Copyright 2024 Mehmet Gunce Akkoyun (Commercial Secret)

© 2026 All rights reserved.
This document may not, in whole or in part, be copied, photocopied, reproduced, translated or converted to any electronic or machine readable from without prior written permission of Mehmet Günce Akkoyun.
Engineer contact : akkoyun@me.com

Property of Gunce Akkoyun

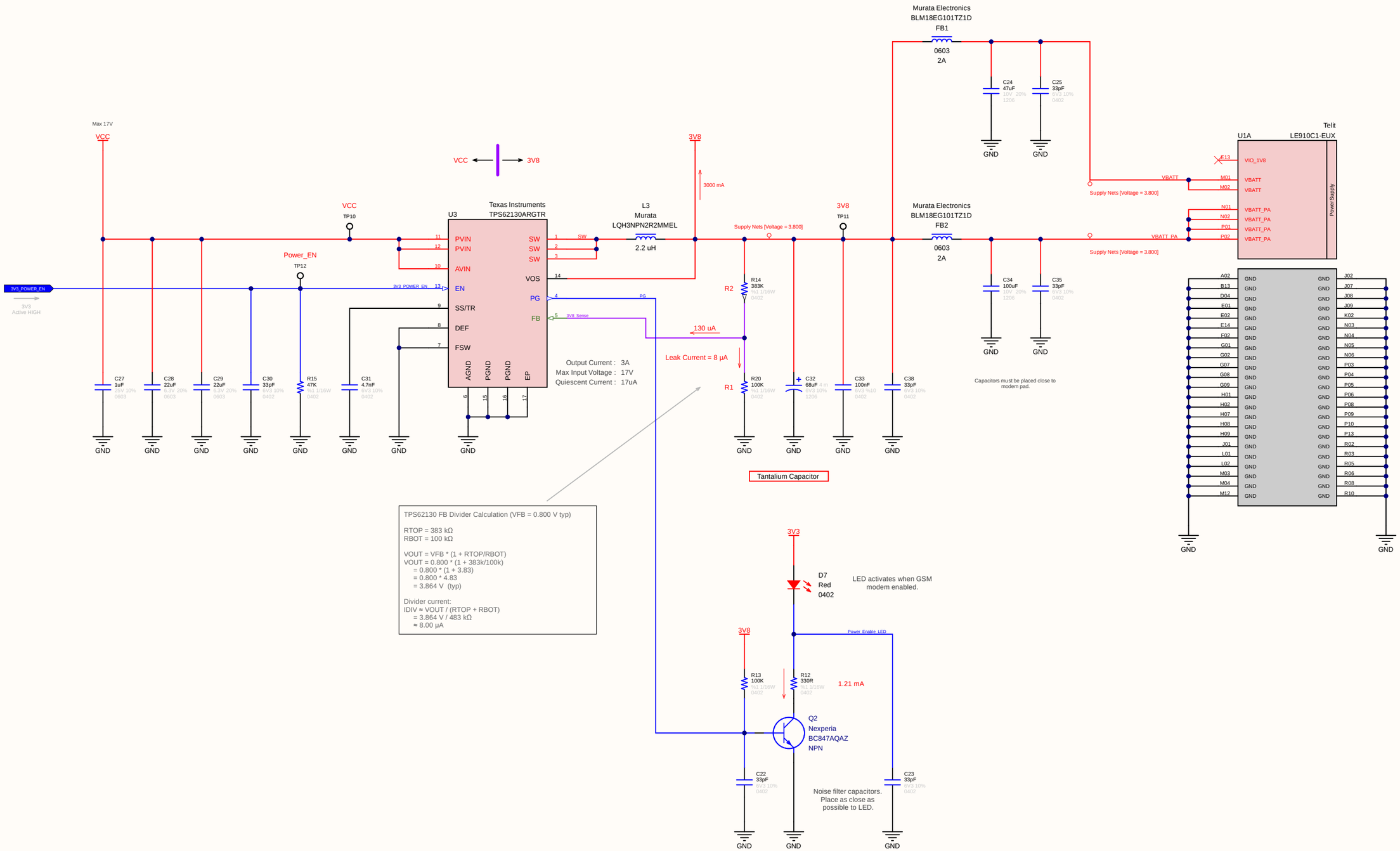

TPS62130 FB Divider Calculation (VFB = 0.800 V typ)

RTOP = 383 kΩ
RBOT = 100 kΩ

VOUT = VFB * (1 + RTOP/RBOT)
VOUT = 0.800 * (1 + 383k/100k)
= 0.800 * (1 + 3.83)
= 0.800 * 4.83
= 3.864 V (typ)

Divider current:
IDIV = VOUT / (RTOP + RBOT)
= 3.864 V / 483 kΩ
≈ 8.00 µA

www.github.com/akkoyun/B101

3V8 Power Regulator		Engineer : Gunce Akkoyun	Ovoo Electronics
		Customer : Gunce Akkoyun	Seker Mah. Ayyildiz Sok
Size : A4	Project : qSlot IoT 4G Modem	Product ID : B101	Silverstar Apt. 7/7
		Module ID : B101	Selcuklu / Konya Türkiye
Date : 28.04.2026	Time : 12:25:59 Page : 3 / 9	Version : 00.00.03	
File : 3V8_Power_Regulator.SchDoc		Revision : CA	

Copyright 2024 Mehmet Gunce Akkoyun (Commercial Secret)

© 2026 All rights reserved.
This document may not, in whole or in part, be copied, photocopied, reproduced, translated or converted to any electronic or machine readable from without prior written permission of Mehmet Günce Akkoyun.
Engineer contact : akkoyun@me.com

Property of Gunce Akkoyun

Manufacturer Note:

LE910C1 GSM Modem signal and communication lines are 1V8 voltage level. MCU signal and communication lines are 3V3 voltage level. So we need to convert all signal and communication lines to acceptable voltage level. We also need a trisstate translator against to backpower LE910 GSM modem.

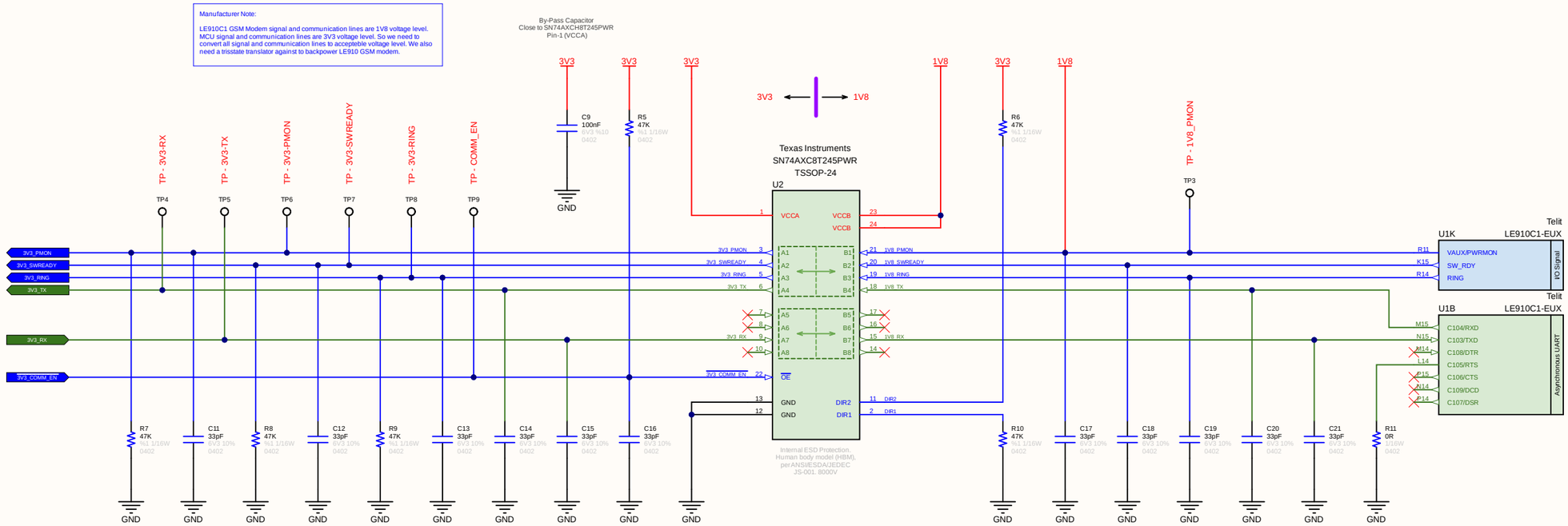


```
OE      DIR1      DIR2       Operation
-----------------------------------------------
H        X        X          Disabled (Hi-Z)
L        L        L          All B to A
L        L        H          B to A / A to B
L        H        L          All A to B
L        H        H          A to B / B to A
```

www.github.com/akkoyun/B101

Voltage Translator		Engineer : Gunce Akkoyun	Ovoo Electronics
		Customer : Gunce Akkoyun	Seker Mah. Ayyildiz Sok
Size : A4	Project : qSlot IoT 4G Modem	Product ID : B101	Silverstar Apt. 7/7
		Module ID : B101	Selcuklu / Konya Türkiye
Date : 28.04.2026	Time : 12:26:00	Page : 4 / 9	Version : 00.00.03
File : Voltage_Translator.SchDoc			Revision : CA

Copyright 2024 Mehmet Gunce Akkoyun (Commercial Secret)

© 2026 All rights reserved.
This document may not, in whole or in part, be copied, photocopied, reproduced, translated or converted to any electronic or machine readable from without prior written permission of Mehmet Günce Akkoyun.
Engineer contact : akkoyun@me.com

Property of Gunce Akkoyun

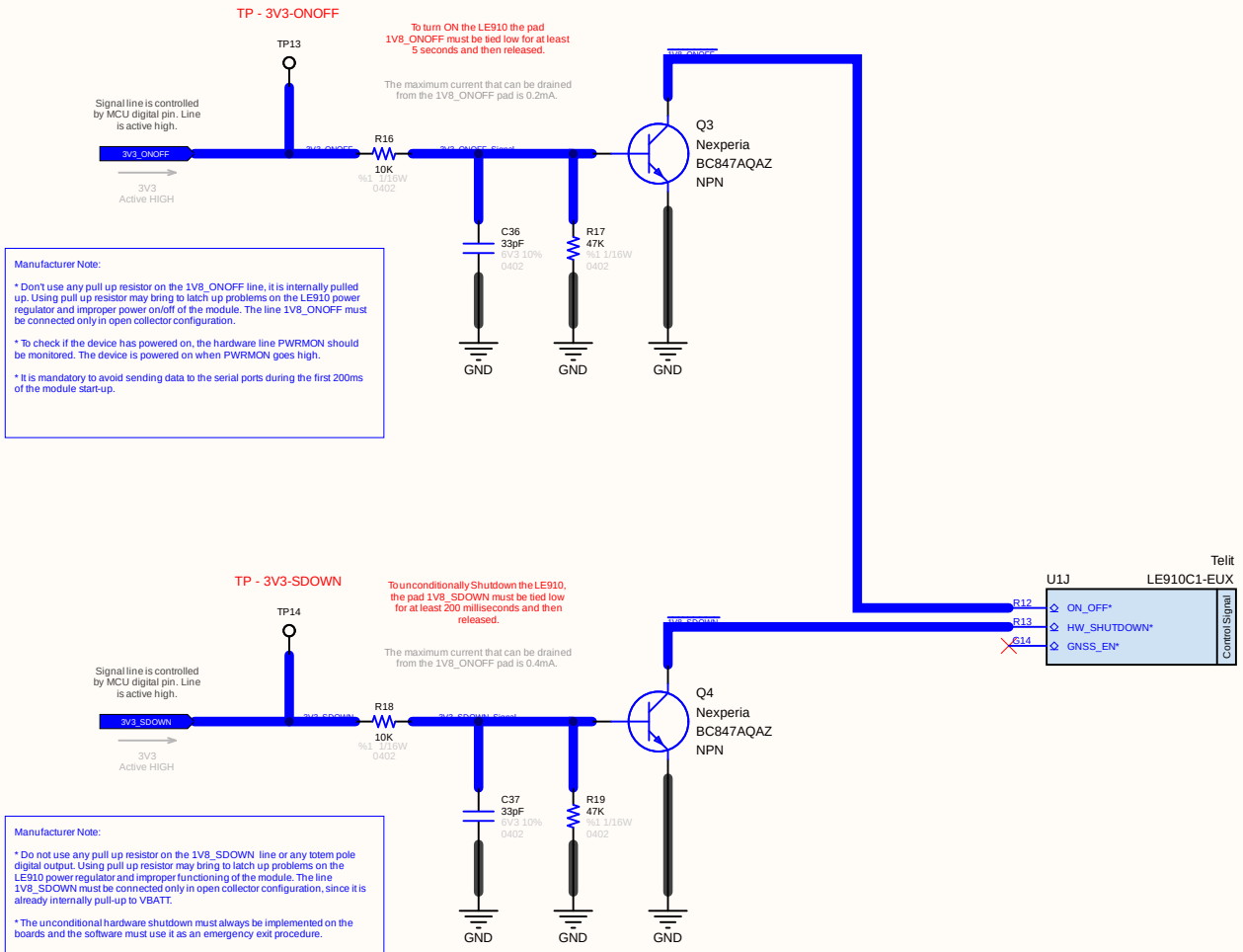

www.github.com/akkoyun/B101

Control Signals		Engineer :	Gunce Akkoyun
		Customer :	Gunce Akkoyun
Size : A4	Project : qSlot IoT 4G Modem	Product ID :	B101
		Module ID :	B101
Date : 28.04.2026	Time : 12:26:00	Page : 5 / 9	Version : 00.00.03
File : Control_Signals.SchDoc			Revision : CA

Ovoo Electronics
Seker Mah. Ayyildiz Sok
Silverstar Apt. 7/7
Selcuklu / Konya Türkiye

Copyright 2024 Mehmet Gunce Akkoyun (Commercial Secret)

© 2026 All rights reserved.
This document may not, in whole or in part, be copied, photocopied, reproduced, translated or converted to any electronic or machine readable from without prior written permission of Mehmet Günce Akkoyun.
Engineer contact : akkoyun@me.com

Property of Gunce Akkoyun

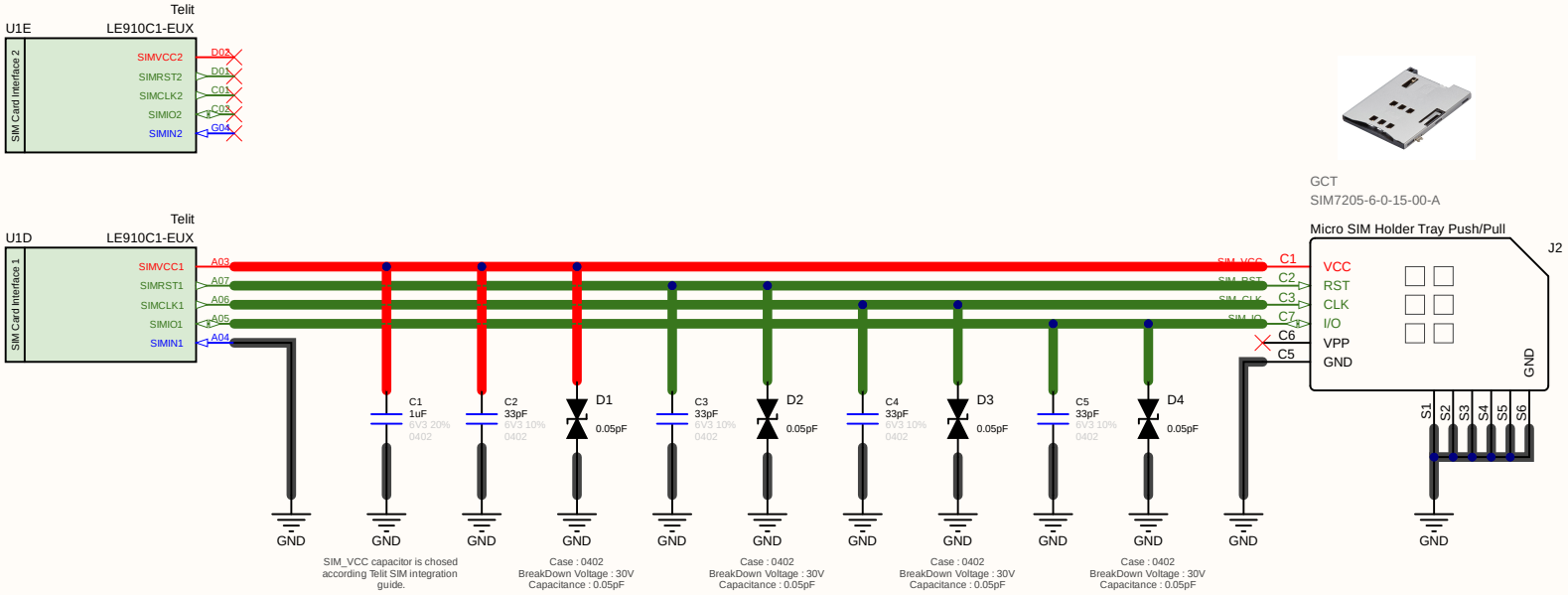

www.github.com/akkoyun/B101

SIM Tray			Engineer : Gunce Akkoyun
			Customer : Gunce Akkoyun
Size : A4	Project : qSlot IoT 4G Modem		Product ID : B101
			Module ID : B101
Date : 28.04.2026	Time : 12:26:00	Page : 6 / 9	Version : 00.00.03
File : SIM_Socket.SchDoc			Revision : CA

Ovoo Electronics
Seker Mah. Ayyildiz Sok
Silverstar Apt. 7/7
Selcuklu / Konya Türkiye

Copyright 2024 Mehmet Gunce Akkoyun (Commercial Secret)

© 2026 All rights reserved.
This document may not, in whole or in part, be copied, photocopied, reproduced, translated or converted to any electronic or machine readable from without prior written permission of Mehmet Günce Akkoyun.
Engineer contact : akkoyun@me.com

Property of Gunce Akkoyun

Width Constraint [Pref Width = 0.77mm Min Width = 0.77mm Max Width = 0.77mm]
Power Plane Clearance [Clearance = 5.906mil]
Impedance Constraint [Min = 49.00 Max = 50.00]

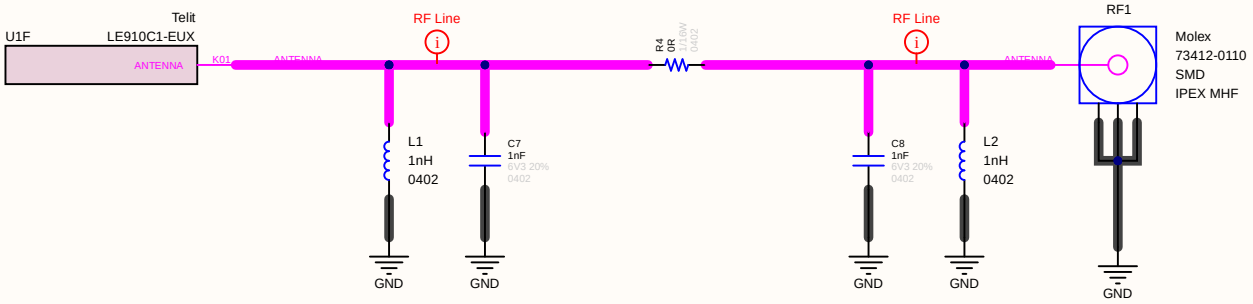

www.github.com/akkoyun/B101

GSM Antenna & Match Circuit		Engineer : Gunce Akkoyun	**Ovoo Electronics**
		Customer : Gunce Akkoyun	Seker Mah. Ayyildiz Sok
Size : A4	Project : qSlot IoT 4G Modem	Product ID : B101	Silverstar Apt. 7/7
		Module ID : B101	Selcuklu / Konya Türkiye
Date : 28.04.2026	Time : 12:26:00 Page : 7 / 9	Version : 00.00.03	
File : Antenna.SchDoc		Revision : CA	

Copyright 2024 Mehmet Gunce Akkoyun (Commercial Secret)

© 2026 All rights reserved.
This document may not, in whole or in part, be copied, photocopied, reproduced, translated or converted to any electronic or machine readable from without prior written permission of Mehmet Günce Akkoyun.
Engineer contact : akkoyun@me.com

Property of Gunce Akkoyun

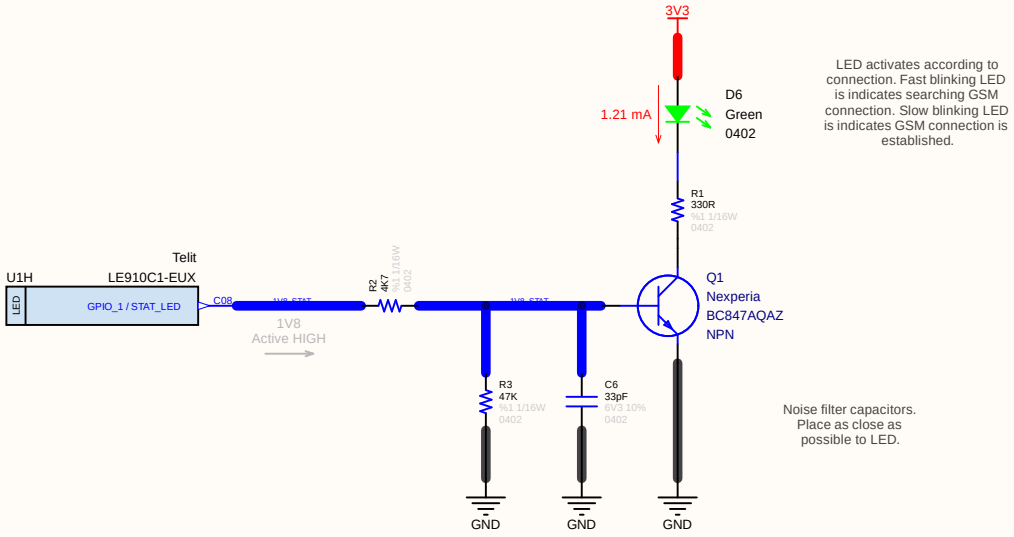

www.github.com/akkoyun/B101

Modem LED Driver		Engineer : Gunce Akkoyun	Ovoo Electronics
		Customer : Gunce Akkoyun	Seker Mah. Ayyildiz Sok
Size : A4	Project : qSlot IoT 4G Modem	Product ID : B101	Silverstar Apt. 7/7
		Module ID : B101	Selcuklu / Konya Türkiye
Date : 28.04.2026	Time : 12:26:00 Page : 8 / 9	Version : 00.00.03	
File : Stat_LED_Driver.SchDoc		Revision : CA	

Copyright 2024 Mehmet Gunce Akkoyun (Commercial Secret)

© 2026 All rights reserved.
This document may not, in whole or in part, be copied, photocopied, reproduced, translated or converted to any electronic or machine readable from without prior written permission of Mehmet Günce Akkoyun.
Engineer contact : akkoyun@me.com

Property of Gunce Akkoyun

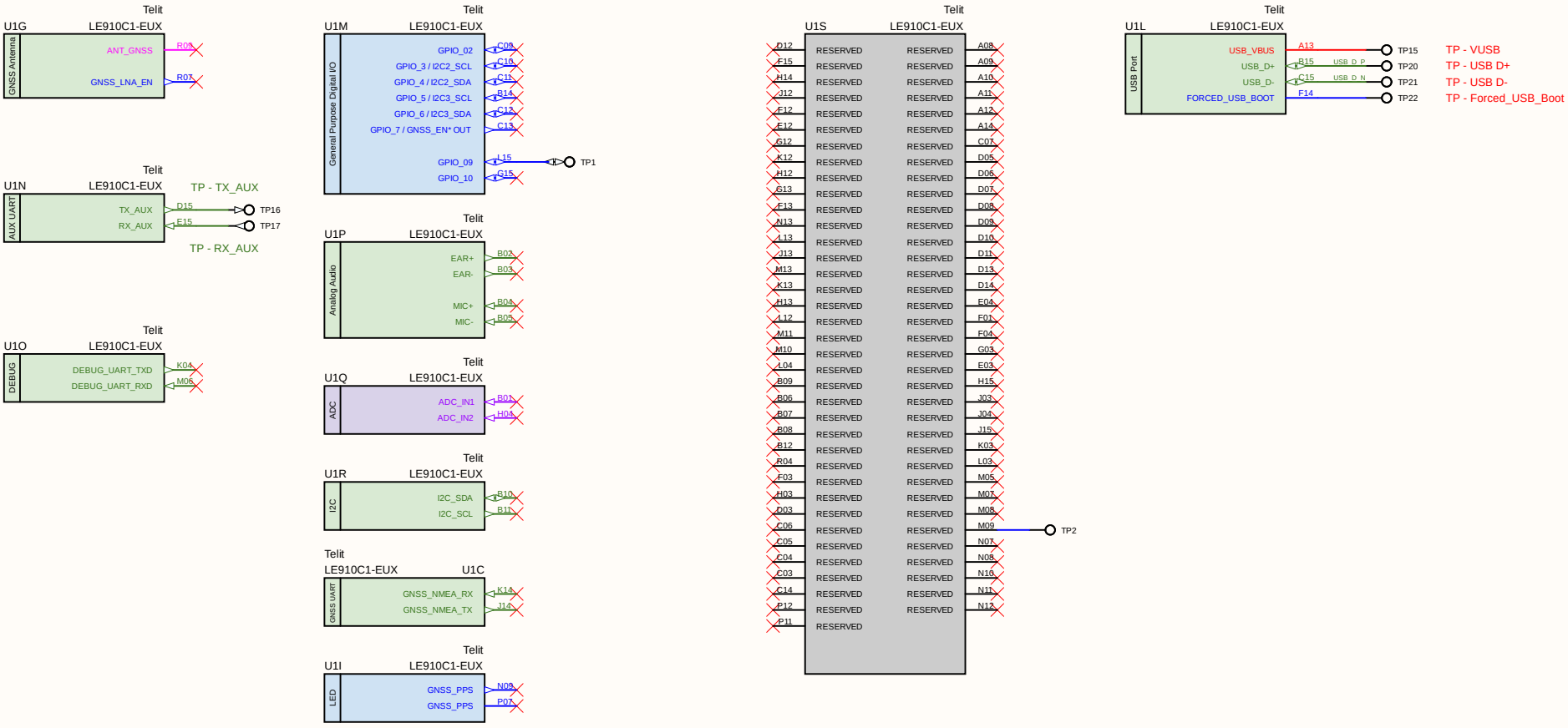

www.github.com/akkoyun/B101

Unused Modem Pins			Engineer : Gunce Akkoyun
			Customer : Gunce Akkoyun
Size : A4	Project : qSlot IoT 4G Modem		Product ID : B101
			Module ID : B101
Date : 28.04.2026	Time : 12:26:00	Page : 9 / 9	Version : 00.00.03
File : Unused_Modem_Pins.SchDoc			Revision : CA

Ovoo Electronics

Seker Mah. Ayyildiz Sok
Silverstar Apt. 7/7
Selcuklu / Konya Türkiye

Copyright 2024 Mehmet Gunce Akkoyun (Commercial Secret)